SigenStor Home Installation Guide

Single-phase System
A1

Version: 02
Release date: 2023-10-25

Caution

- Trained or experienced electrical personnel are required to operate the equipment.
- Operators should be familiar with national/regional laws, regulations and standards, the structure and working principle of relevant systems.
- Please read carefully the operating requirements and precautions in this document and Important Notice before operating. Failure to do so may result in damage to the equipment that is not covered by the warranty.
- Please consult with the owner for expansion requirements (for example, adding battery packs) before operating. If any, please reserve necessary expansion space and cable length during installation.

1 Introduction to Single-phase System

1.1 Introduction to Networking

Backup networking

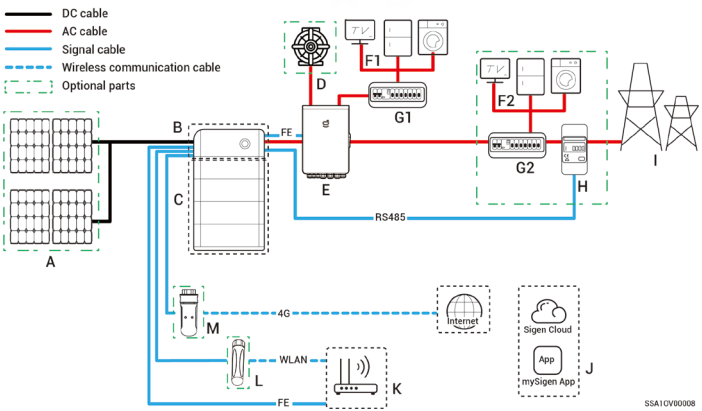

Non-backup networking

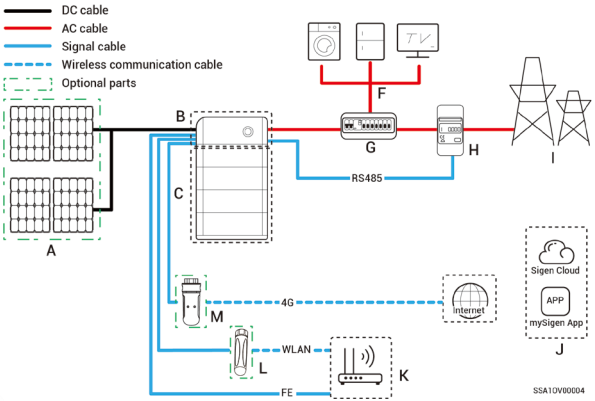

Tips

It is recommended to use FE and WLAN for communication with inverter. Sigen CommMod users must top up their own 4G data plan after a period of 2 years.

S/N	Equipment/component	Model/version	Function specification
A	PV module	-	-
B	SigenStor EC	SigenStor EC 3.0/3.6/4.0/4.6/5.0/6.0 SP	Inverter; it can be used in photovoltaic energy storage scenarios and needs to be used together with PV modules and SigenStor BAT.
	SigenStor AC	SigenStor AC 3.0/3.6/4.0/4.6/5.0/6.0 SP	Inverter; it can be used in pure storage scenarios and needs to be used with SigenStor BAT.
	Sigen Hybrid	Sigen Hybrid 3.0/3.6/4.0/4.6/5.0/6.0 SP	Inverter; it can be used in conjunction with PV modules for pure PV applications or in combination with PV modules and SigenStor BAT for photovoltaic storage systems after the purchase and activation of a license.
C	SigenStor BAT	SigenStor BAT 5.0/8.0	Battery pack; it can store electric energy.
D	Diesel generator	-	As a backup energy source for long-term off-grid applications, it can work in tandem with the Gateway to provide a smooth transition between PV, storage and diesel generator .
E	Gateway	Sigen Gateway HomeMax SP	It's applicable for PV storage and pure storage applications to facilitate data acquisition and monitoring, off-grid backup power switching, diesel generator control, energy management; it must be used with SigenStor BAT and inverter. Gateway is a must-have for backup networking; for partial backup power and zero-power grid connection control networking, the Gateway and power sensor must be arranged.
F	Electric equipment	-	In the backup networking, F1 is the electric equipment for backup; F2 is non-backup the electric equipment; G1 is the backup Distribution panel; G2 is the non-backup Distribution panel.
G	Distribution panel	-	The rated voltage of the AC switch connected to each inverter should be ≥ 240 Va.c. and the rated current is recommended: • SigenStor EC/SigenStor AC/Sigen Hybrid (3.0-4.0) SP: The rated current is 25 A • SigenStor EC/SigenStor AC/Sigen Hybrid (4.6-6.0) SP: The rated current is 40 A
H	Power sensor	Sigen Sensor SP-DH (SDM230MODBUS) Sigen Sensor SP-CT120-DH (SDM120CT 40mA)	Data acquisition for grid connection points enables zero-power grid connection. No power sensor is needed for home-wide backup networking.
I	Power grid	-	-
J	App	mySigen	Android 6.0 or later iOS 12.0 onwards
K	Router	-	To be used for FE/WLAN communication.
L	Antenna	-	To be used for WLAN communication.
M	Communication module	Sigen CommMod	To be used for 4G communication.

Tips

For further information on the installation and wiring of Gateway, refer to the corresponding documentation.

1.2 Equipment Appearance and Dimensions

Inverter and battery pack

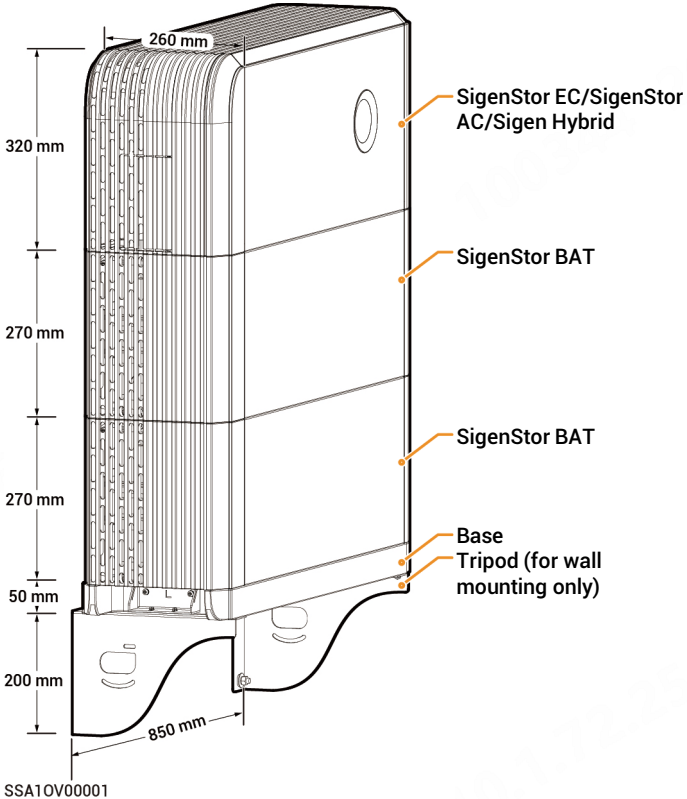

1.3 Port Descriptions

SigenStor EC/ SigenStor AC/Sigen Hybrid Left View

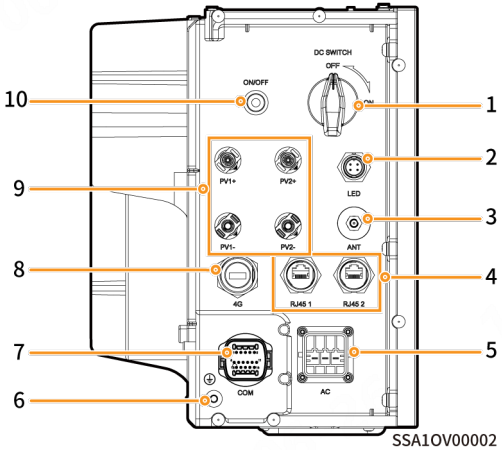

S/N	Name	Marking
1	DC switch	DC SWITCH
2	Decorative cover light strip connector	LED
3	Antenna interface	ANT
4	Cable interface	RJ45 1/ RJ45 2
5	AC output interface	AC
6	Ground screw	-
7	Communication interface	COM
8	Sigen CommMod interface	4G
9	DC input interface	PV1+/PV2+/ PV1-/PV2-
10	Switch button	ON/OFF

2 Pre-installation Check

- According to the packing list, check whether the components are complete and in good appearance. If any abnormality occurs, contact your sales agent in time.
- Check personal protective equipment and installation tools to ensure that they are complete; If not, please make them up.
- Check the customer-provided cable to ensure that the quantity and specifications are correct; if not, prepare again.

Protective equipment

Safety hat

Safety glasses

Dust mask

Protective gloves

Insulating gloves

Insulating shoes

Installation tool

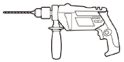
Power drill

Vacuum cleaner

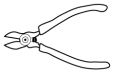
Wire cutter

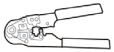
Crimp tool

Crimping pliers

Wire stripper

Scissors

Cable tie

Heat shrinkable sleeve

Heat gun

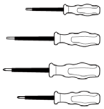
Insulation screwdriver set

Lock (Lock bar diameter ≤5 mm)

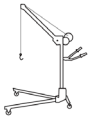
Lift (used with ≥3 SigenStor BATs)

Stainless steel covered plastic steel rope (load capacity: ≥250 kg Diameter: 3 mm)

Open-end wrench (model: H4TW0001 Manufacturer: Amphenol)

Crimping pliers (model: H4TC0003 Manufacturer: Amphenol)

Insulation sleeve set

Torque socket wrench

Marker

Rubber mallet

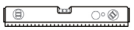
Level

Tape measure

Installer-provided cable

S/N	Cable name		Recommended specifications
1	Protective ground cable of inverter housing		Outdoor single-conductor copper cable Cross-sectional area of core conductor: 4–6 mm²; outer diameter: 4–8 mm
2	AC cable	The inverter connected to the distribution panel	Outdoor three-core copper cable (L, N, PE) Cross-sectional area of core conductor: 4–6 mm²; outer diameter: 13–21 mm
3	RS485 signal cable	The inverter connected to the power sensor	Outdoor shielded twisted pair Cross-sectional area of core conductor: 0.5–0.75 mm² (multi-core flexible conductor, Tubular terminal needed); 0.5–1 mm² (single-strand hard conductor, no tubular terminal needed) Outer diameter: 4.5–6.5 mm
4	RJ45 network cable	The inverter connected to the router	Outdoor eight-conductor shielded twin-twisted pair cable Cross-sectional area of core conductor: 0.13–0.2 mm²; outer diameter: 4–7.5 mm
5	DC input cable of inverter (Ignore this cable in case of SigenStor AC inverters)		Outdoor photovoltaic cable Cross-sectional area of core conductor: 4–6 mm²; outer diameter: 5.5–9 mm

Tips

Recommended specifications for cables connecting power sensors to Distribution panel and to the grid, as well as step-by-step instructions for wiring, can be found in the accompanying documentation for each respective model.

3 Equipment Installation

Installation environment

- Do not install the equipment in smoky, flammable, explosive, or corrosive environments.
- Do not install the equipment outdoors in areas prone to salt damage area, which are located less than 500 meters from the coastline or affected by sea wind.
- Do not install the equipment in environments exposed to direct sunlight, rain, standing water, snow accumulation, sand, and dust. It is recommended to install in a sheltered location. If the area is susceptible to natural disasters such as floods, landslides, earthquakes, or typhoons, take preventive measures during equipment installation.
- Do not install the equipment in an environment with strong electromagnetic interference.
- Ensure that the temperature and humidity of the installation environment comply with the equipment's requirements.

Installation position

- Do not tilt or overturn the equipment to ensure that it is installed horizontally.
- Do not install the equipment in a place easily touched by children.
- Do not install the equipment in places with fire or damp (including but not limited to kitchen, tea room, toilet, shower room, laundry room, etc.).
- Please keep away from the daily work and living places (including but not limited to living room, bedroom, studio, lounge, study, etc.)
- Do not install the equipment in areas with difficult access (including but not limited to attic, basement, etc.).
- Do not install the equipment in mobile scenarios such as RVS, cruise ships, and trains.
- You are advised to install the equipment in a position that is easy to operate, maintain, and view indicator status.
- When installing the equipment in the garage, do not install the equipment in the position where the vehicle passes through to avoid collision.

Mounting surface

- Do not install the equipment on a flammable carrier.
- The installation carrier must meet load-bearing requirements. Solid brick-concrete structure, concrete walls, and ground are recommended.
- The surface of the installation carrier must be smooth and the installation area must meet the installation space requirements.
- No water or electricity is routed inside the carrier to prevent drilling hazards during equipment installation.

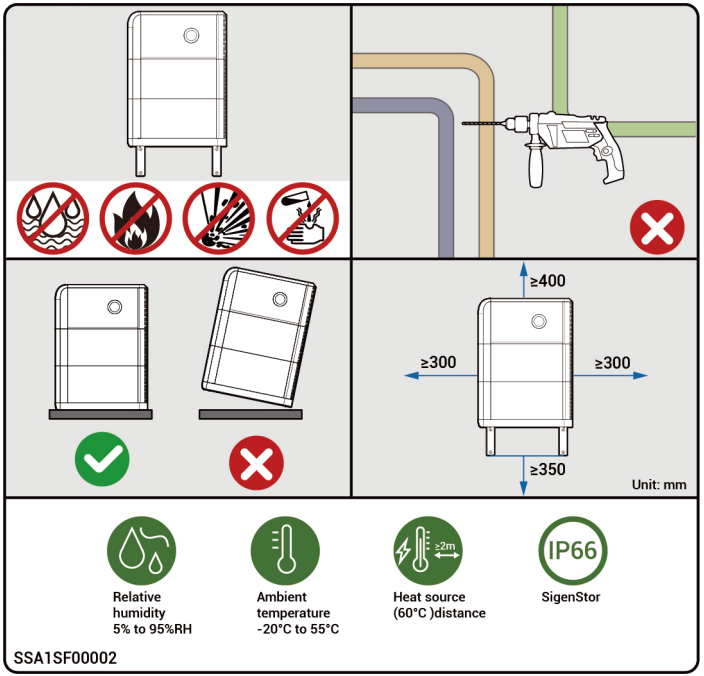

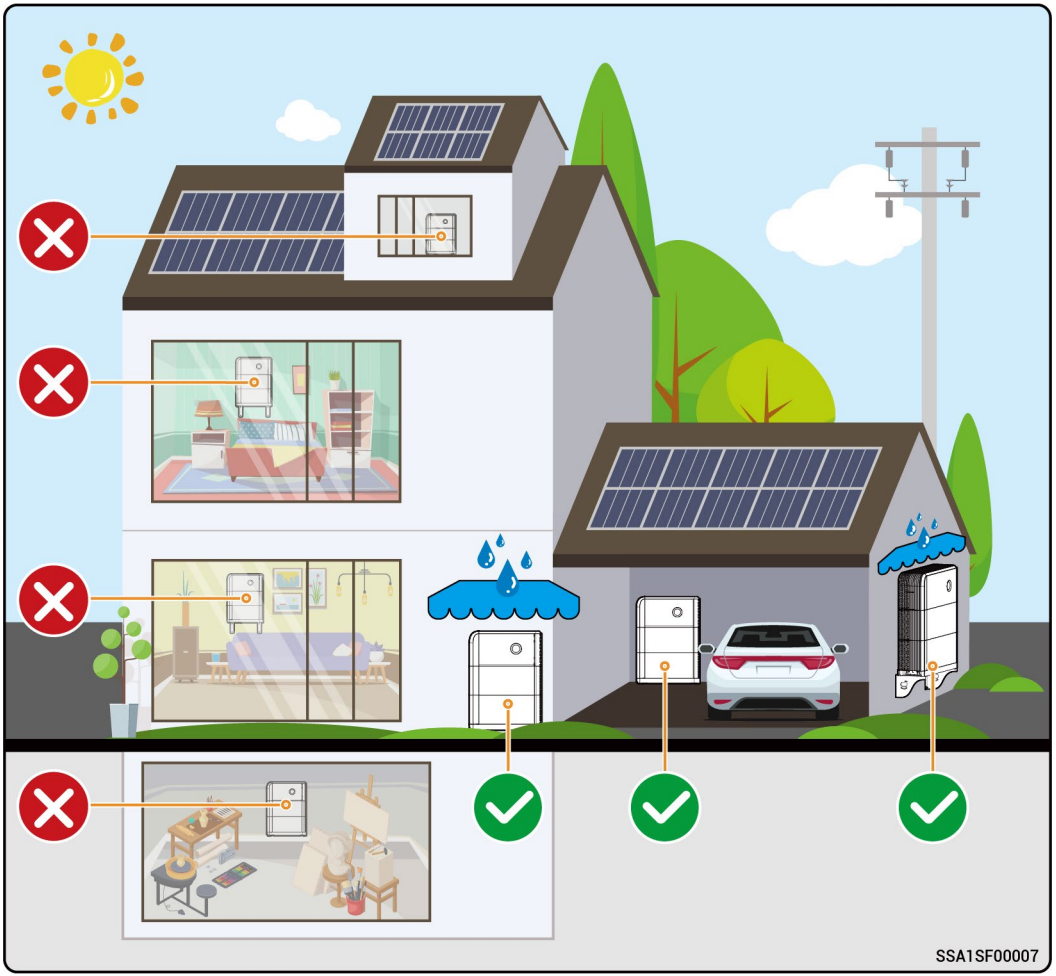
SSA1SF00007

4 Installation of inverter and battery pack

Tips

- At least two people are required to install the equipment.
- Up to six SigenStor BATs are supported for floor installation and up to two for wall installation.
- When installing three or more SigenStor BATs on the floor, use the Lift .
- Multiple SigenStor BATs can be installed onsite based on the actual configuration.
- If the floor is prone to stagnant water, please set up a waterproofing platform or install it on the wall.
- The equipment is heavy, do not slip off when handling the equipment to avoid the equipment falling and injuring the operator.
- SigenStor BAT is forbidden to be used after falling, please buy a new one.
- Do not drag the equipment during installation

4.1 Floor Installation

1 If the horizontal bubble is not centered, use a leveling gasket to level it.

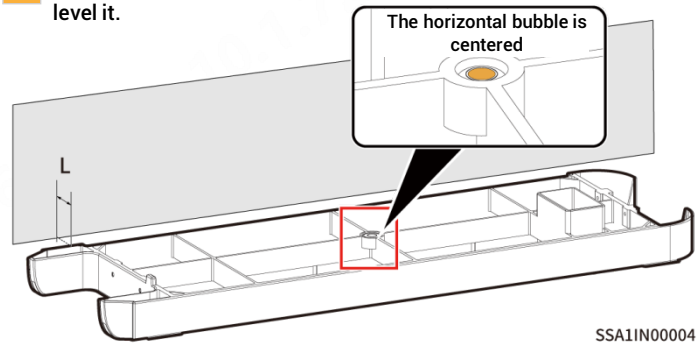

Wall fastener	L
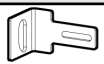	25 mm to 43 mm
	52 mm to 70 mm

2 Follow the steps on the underlined template. PACK is the punch point for SigenStor BAT, and INV is the punch point for SigenStor EC, SigenStor AC, Sigen Hybrid.

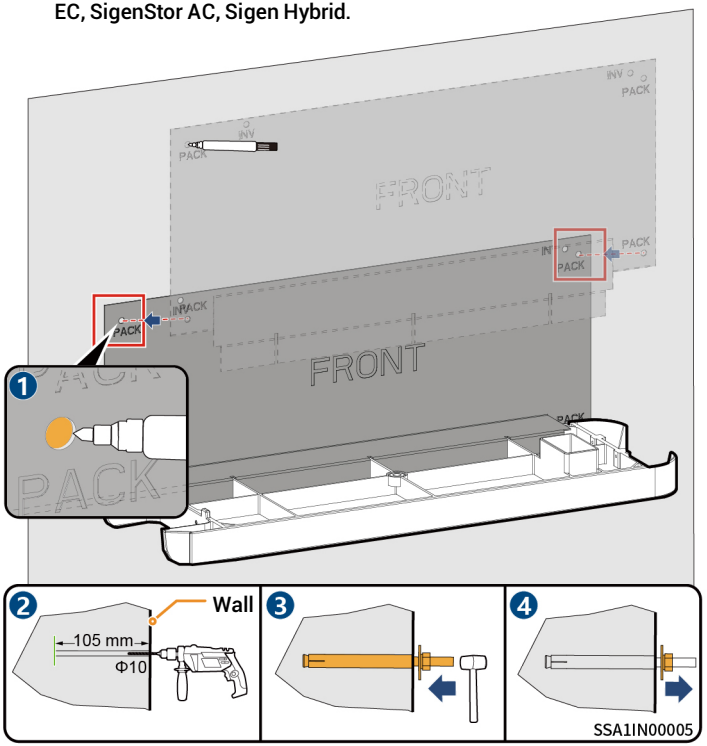

Tips

- The thickness of the perforated wall is greater than the length of expansion bolt.
- After installing the expansion bolt on the wall, remove the nut and store it properly for later use.

3 Before installing the handle, please use a torque socket wrench to measure the screws and confirm that the screws on Sigen BAT are securely tightened with a torque of 4.5 N·m (±0.45 N·m).

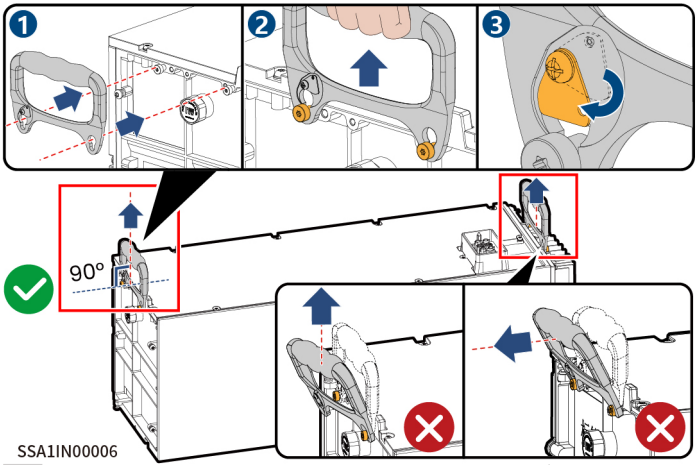

SSA1IN00006

4 SigenStor BAT is kept horizontally and mounted vertically downwards.

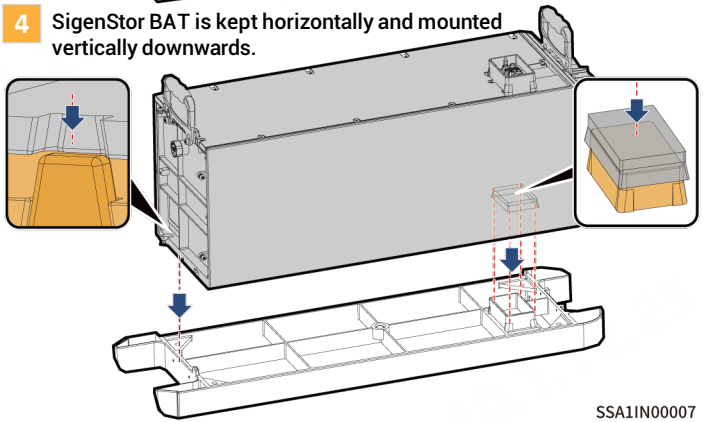

SSA1IN00007

5 For details about how to place the second SigenStor BATs, see Steps 3 4 .

6 (Optional) If three or more SigenStor BATs are to be installed, use a lift. For details about the hoisting rope binding scheme, see the figure.

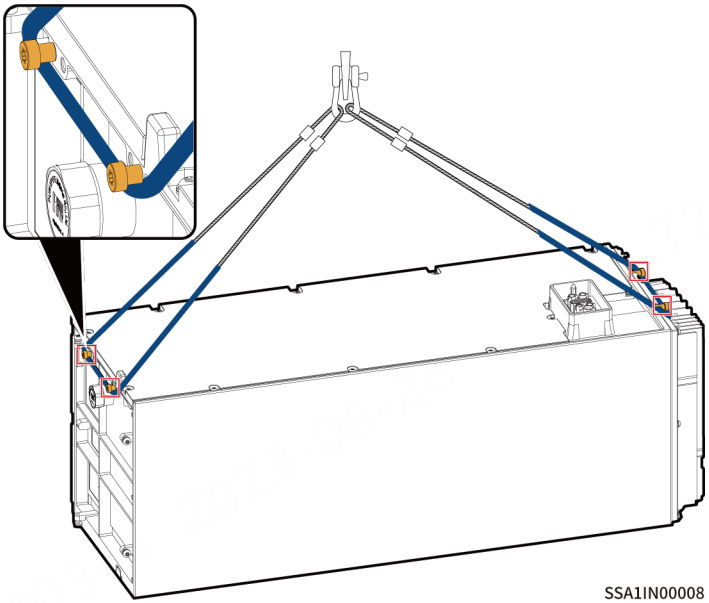

SSA1IN00008

Tips

During lifting operations, the area where the sling comes in contact with the equipment should be wrapped with a protective layer to avoid damage to the equipment.

7 Arrange SigenStor EC, SigenStor AC or Sigen Hybrid.

SigenStor EC or SigenStor AC

For details, see Step **4**.

Sigen Hybrid

Remove the IP protection cover at the bottom, install the chuck screws of the decorative covers, and arrange them as described in Step **4**.

Tips

The chuck screws are packed in the extension package.

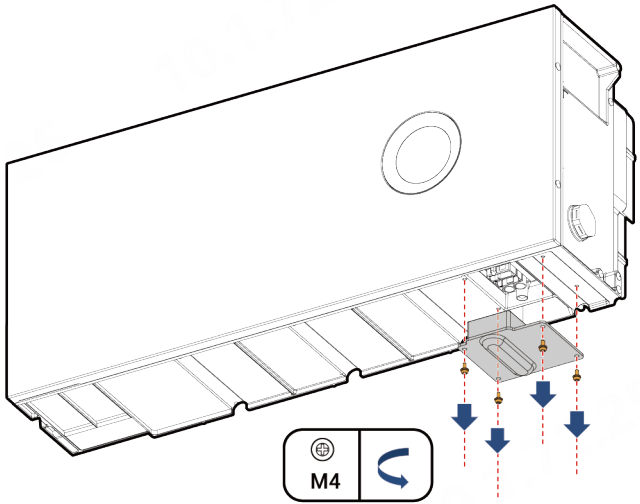

SHA1IN00001

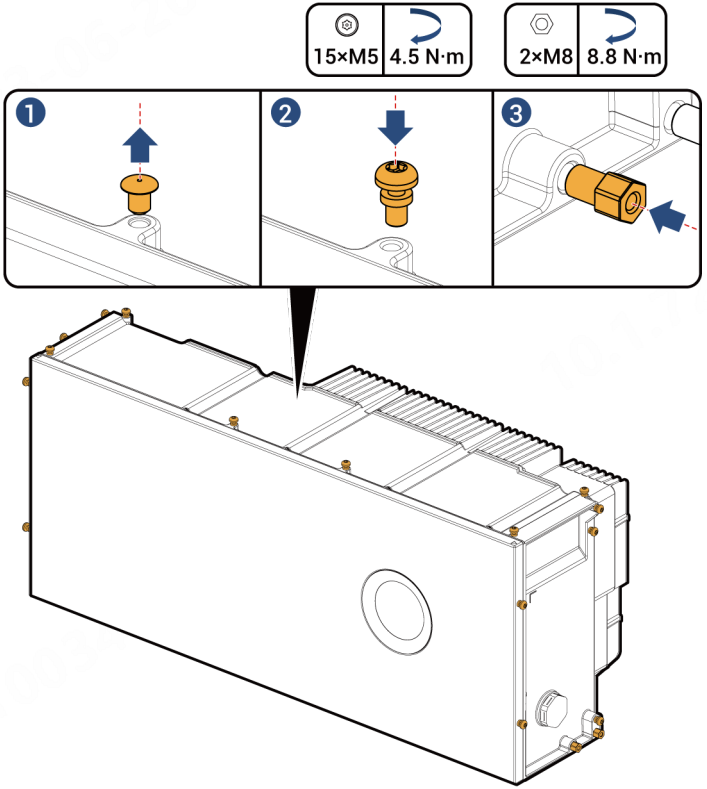

SHA1IN00002

8

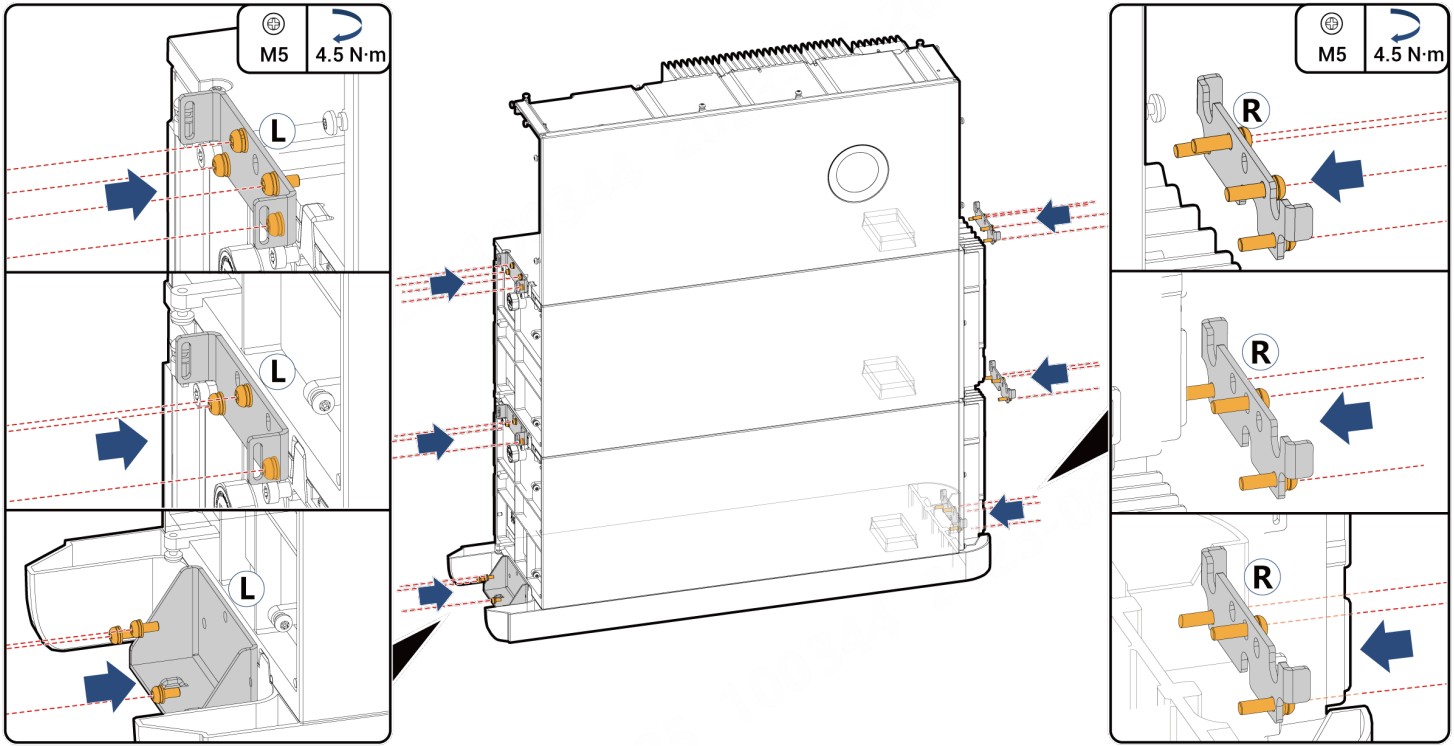

SSA1IN00009

9

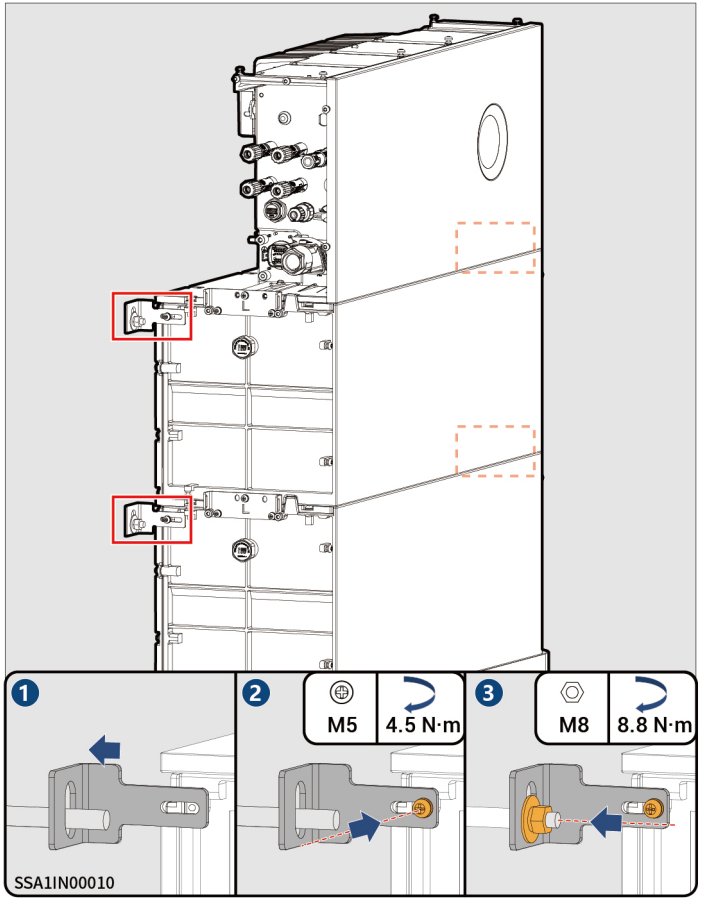

10

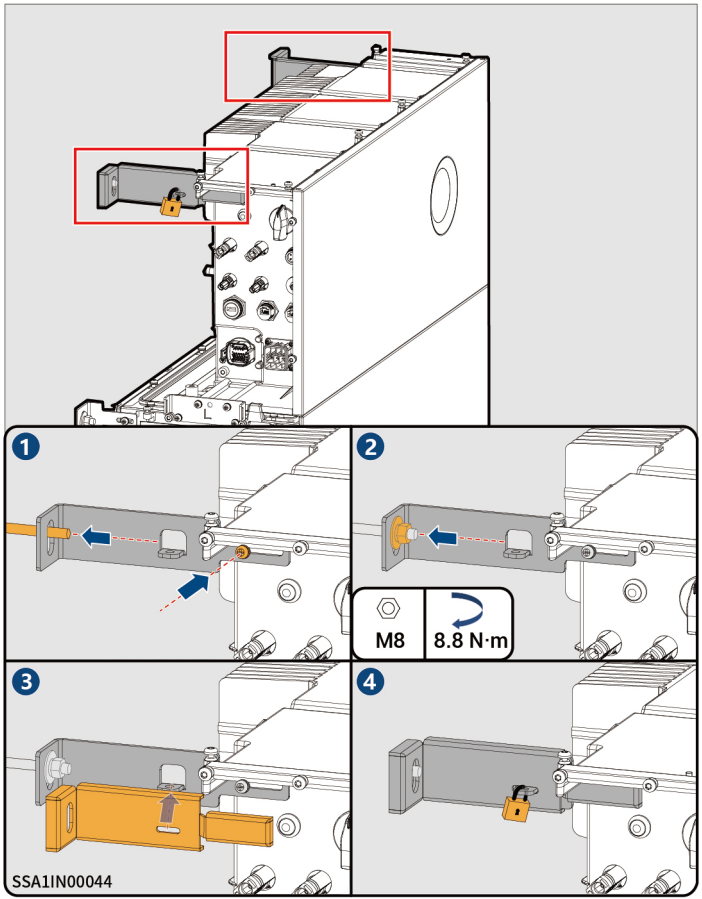

4.2 Wall Installation

1

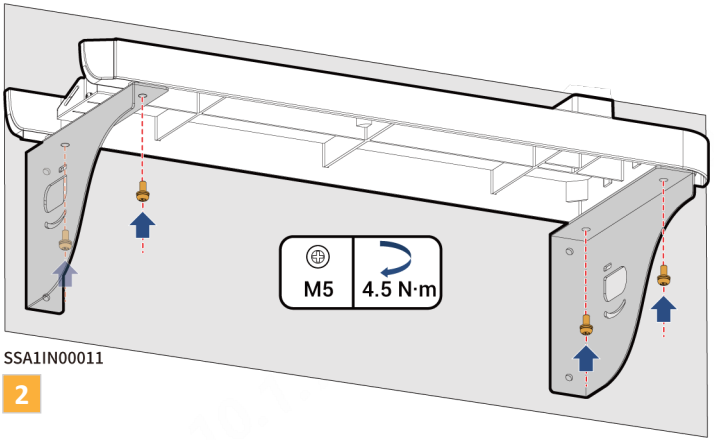

SSA1IN00011

2

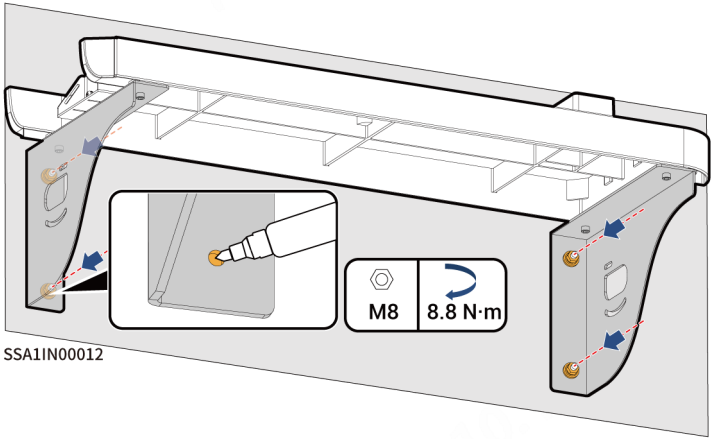

SSA1IN00012

3

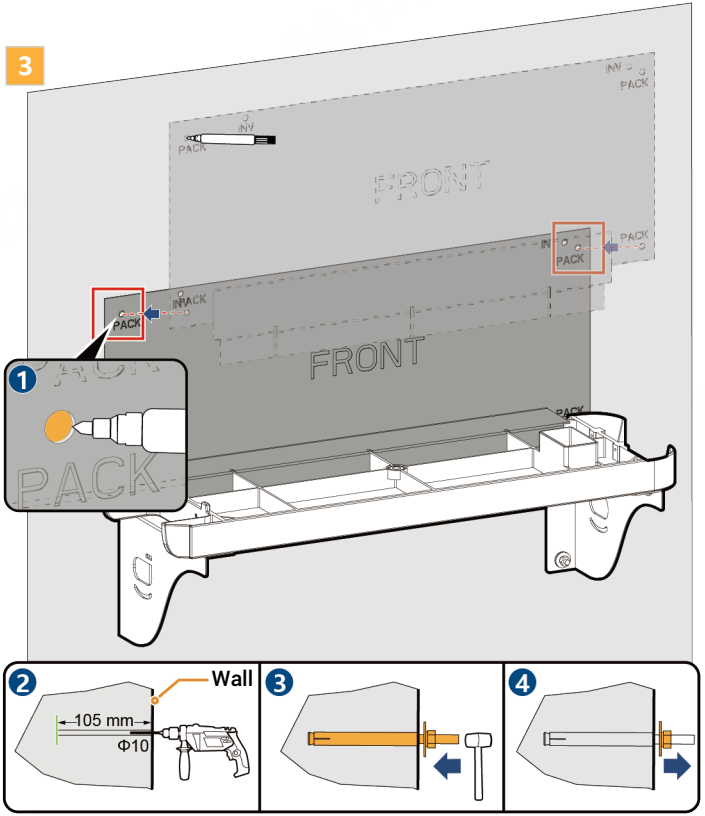

SSA1IN00013

4 For details about how to place the SigenStor BAT, see Steps 3 4 of 4.1 Floor installation.

5 For details about how to place the inverter, see Steps 7 of 4.1 Floor installation.

6 For details about how to fix the equipement, see Steps 8 9 10 of 4.1 Floor installation.

Warning

Before connecting cables, ensure that DC SWITCH is in the OFF state, and the front switch of the AC line is off.

Tips

- The cable colors in the figure are used only to distinguish different lines. The cable colors are based on actual conditions.
- Bind the power cable separately from the signal cable.

5.1 Recommended Cabling installation

Scheme I

- AC output cable
- RS485 signal cable
- Protective ground cable
- RJ45 cable
- DC input cable

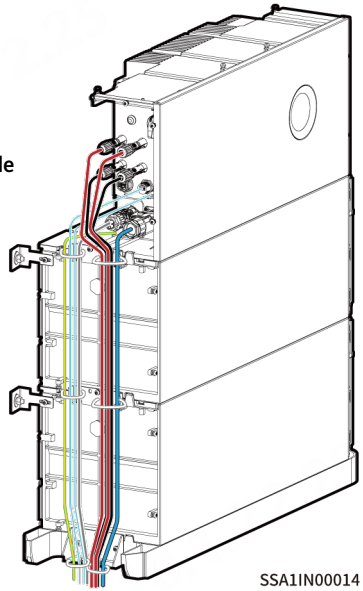

SSA1IN00014

Tips

- There are three routing schemes, Select them based on the actual situation.
- If pipe routing is used onsite, the recommended pipe diameter is at least 67 mm.

Scheme II

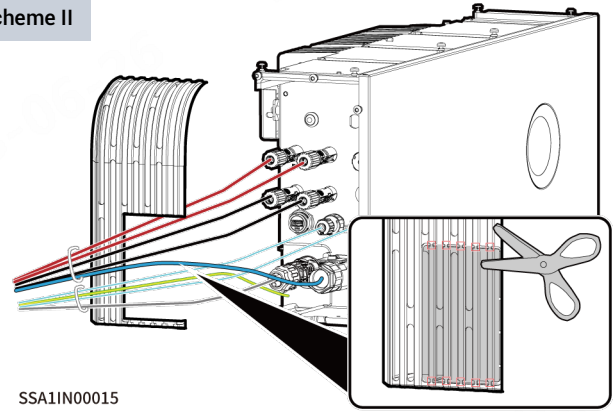

SSA1IN00015

Scheme III

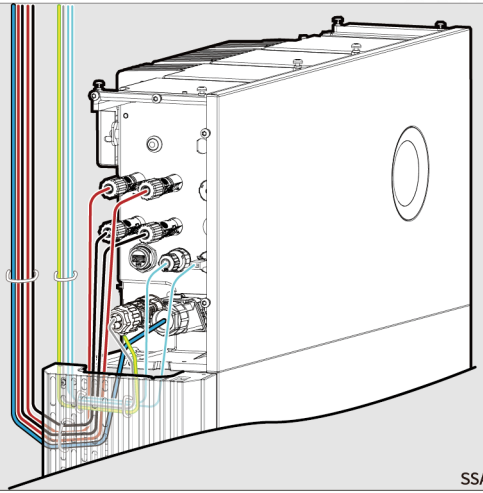

SSA1IN00016

5.2 Protective Ground Cable of Inverter Housing

Tips

The protective ground wire should be grounded in close proximity.

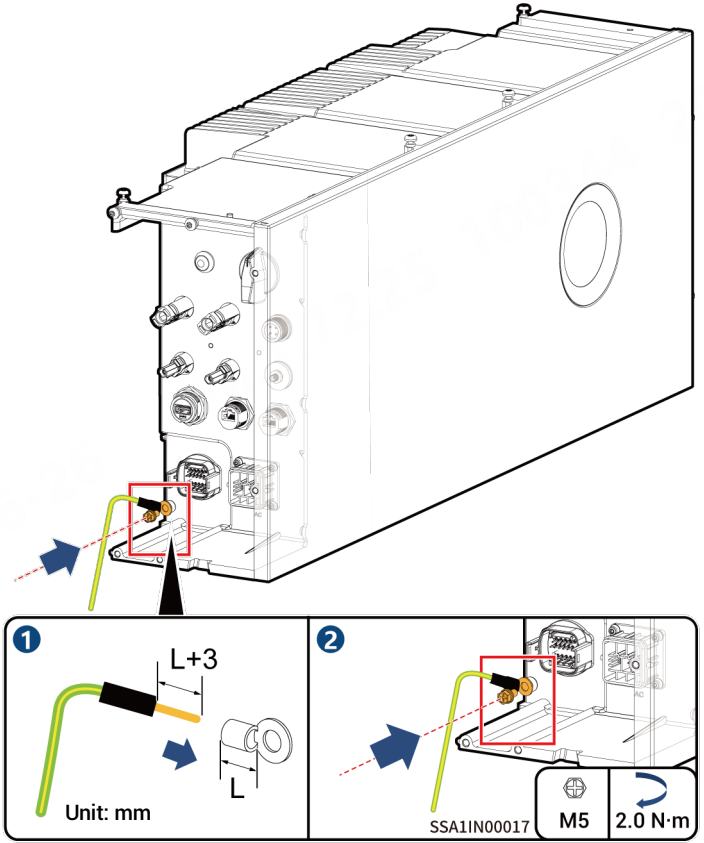

5.3 AC Output Cable of Inverter

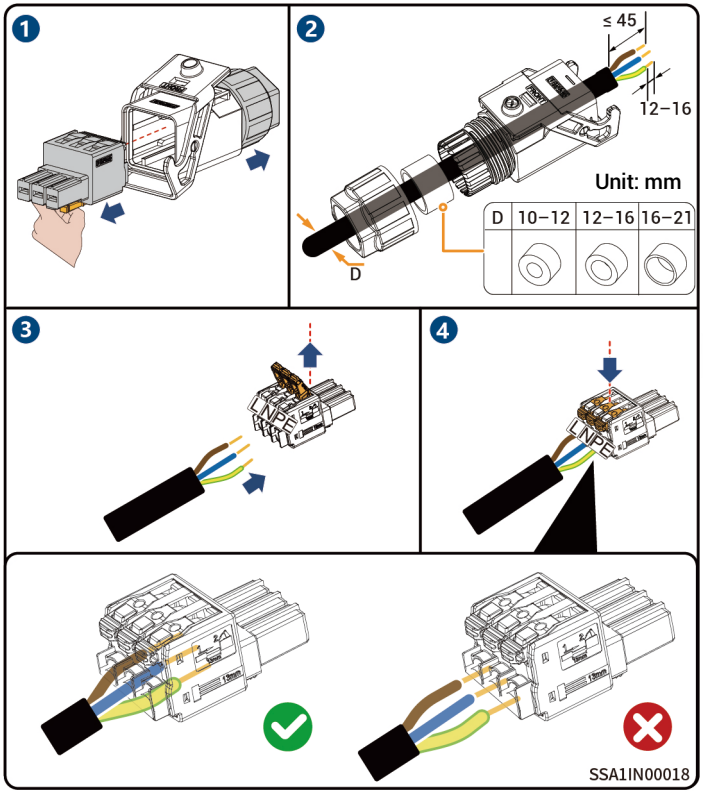

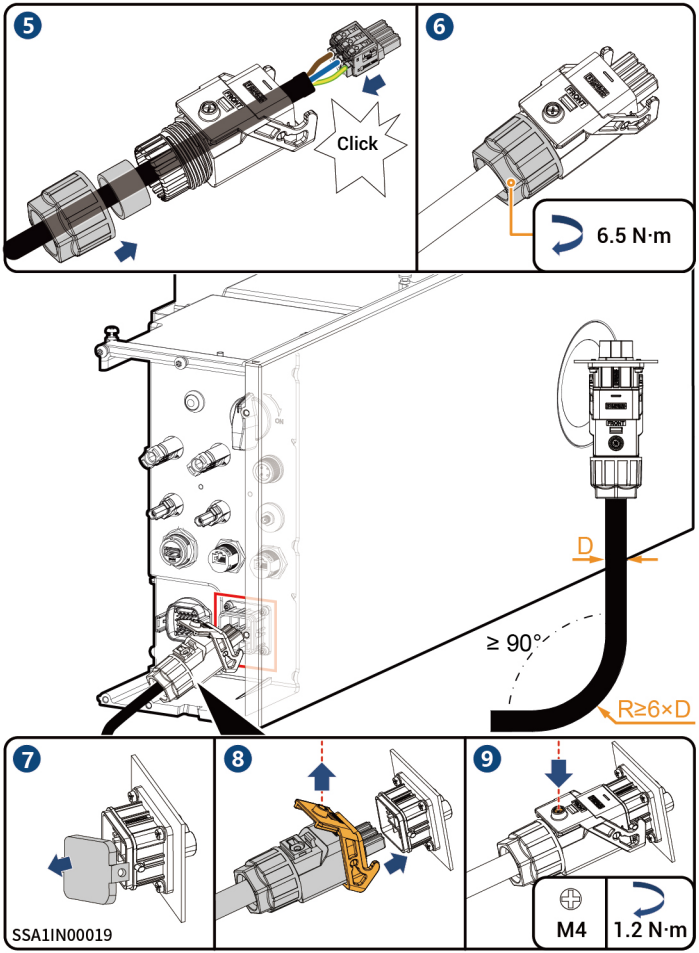
5
Click
6
6.5 N·m
D
≥ 90°
R≥6×D
7
SSA1IN00019
8
9
M4
1.2 N·m

5.4 RS485 Signal Cable

Tips

If a power sensor is used, one end of the RS485 signal cable is connected to the inverter while the other end to the power sensor.

5.4.1 Introduction to Correspondence

COM terminal of the inverter

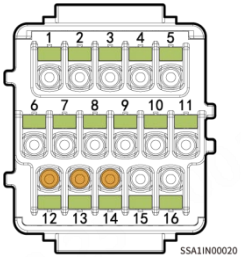

Tips

The appearance and specific wiring of the power sensor can be found in the instruction manual delivered with the case.

Description	Interface definition	COM terminal of the inverter	Sigen Sensor SP-DH (SDM230Modbus)	Sigen Sensor SP-CT120-DH (SDM120CT 40mA)
(Reserved) DO1, connected to third party intelligent electric equipment, such as switch control and heat pump	Dry contact 1 - Common	1	-	-
	Dry contact 1 - NO	2	-	-
(Reserved) DO2, connected to third party intelligent electric equipment, such as switch control and heat pump	Dry contact 2 - Common	3	-	-
	Dry contact 2 - NO	4	-	-
(Reserved) For power scheduling, such as DRM and Ripple control	DI1, digital input 1	5	-	-
	DI2, digital input 2	6	-	-
	DI3, digital input 3	7	-	-
	DI4, digital input 4	8	-	-
	DI5, digital input 5	9	-	-
	Signal GND	10	-	-
COM port used to access the power sensor	PE signal shielding ground	12	-	-
	RS485 signal 2_B-	13	6	9
	RS485 signal 2_A+	14	5	10
(Reserved) Standby RS485 port	PE signal shielding ground	11	-	-
	RS485 signal 1_A+	15	-	-
	RS485 signal 1_B-	16	-	-

5.4.2 RS485 Signal Cable of Inverter

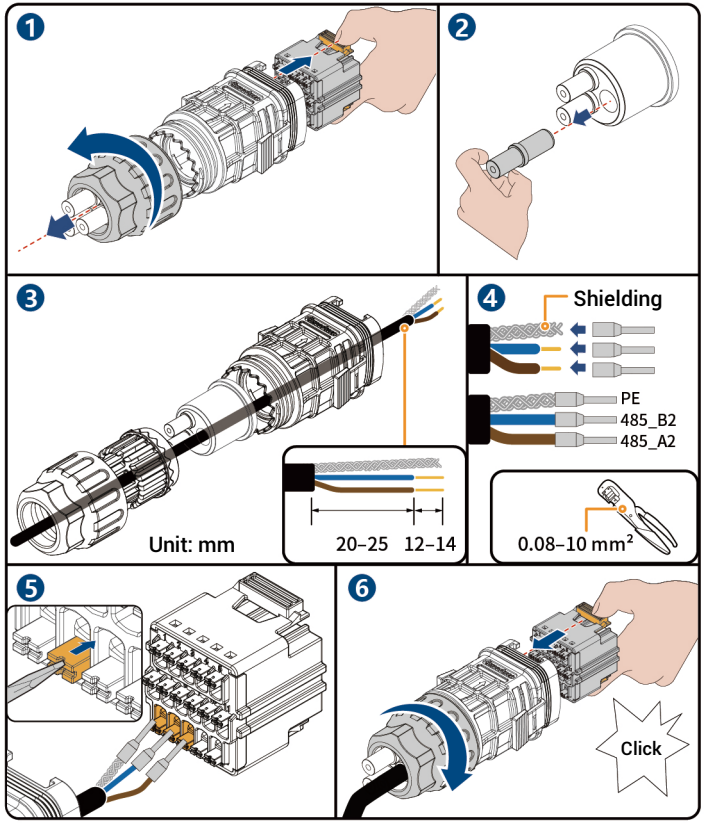

SSA1IN00021

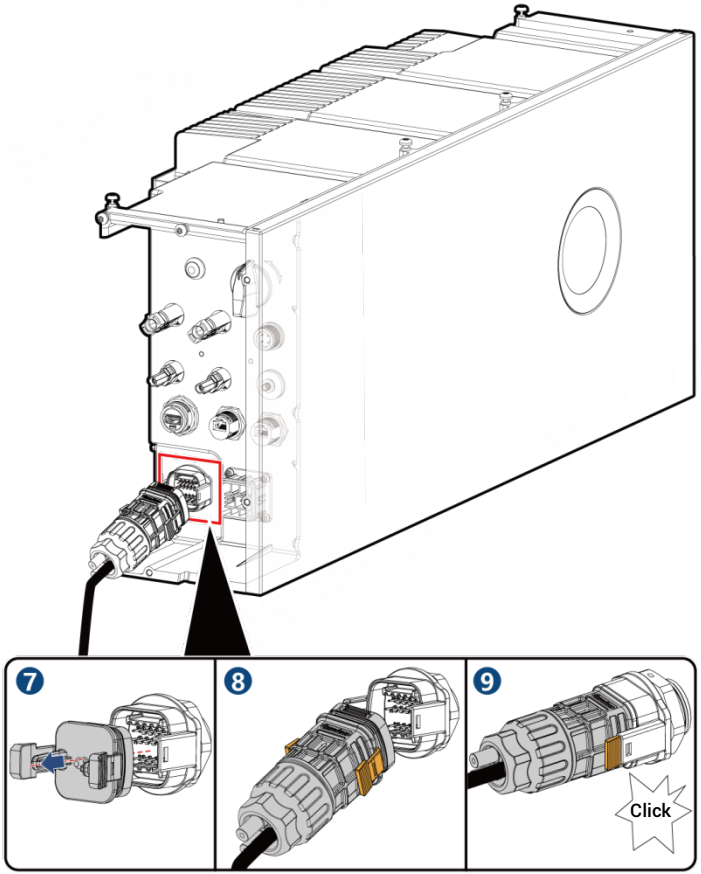

SSA1IN00022

5.5 RJ45 Cable of Inverter

Tips

- Two RJ45 network ports: One for the router.
- RJ45 cables are EIA/TIA 568B standard cable.

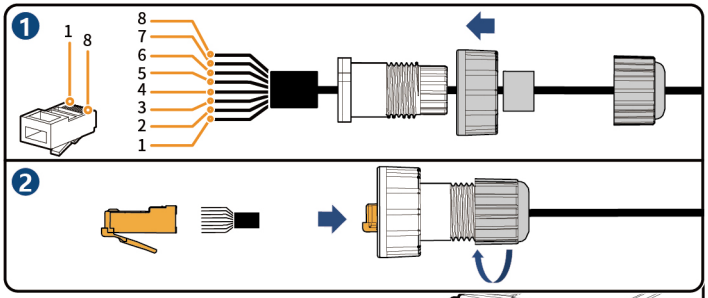

① White orange
② Orange
③ White green
④ Blue
⑤ White blue
⑥ Green
⑦ White brown
⑧ Brown

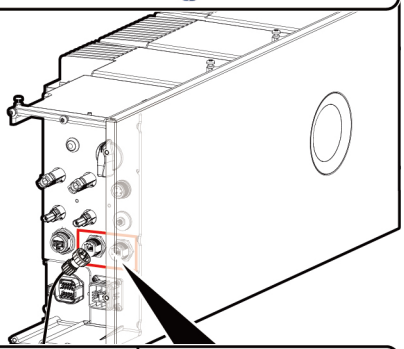

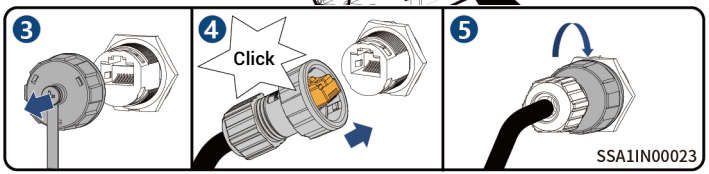

5.6 Sigen CommMod Installation

Tips

Sigen CommMod is required for 4G communication.

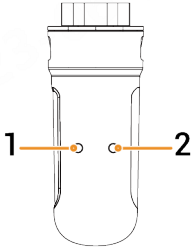

SCA1OV00001

S/N	Indicator	Description
1	Power indicator	-
2	Network state indicator	• Slow flashing (200ms on/1800ms off): The network is being connected • Slow flashing (1800ms on/200ms off): Standby • Quick flashing (125ms on/125ms off): Data is being transferred

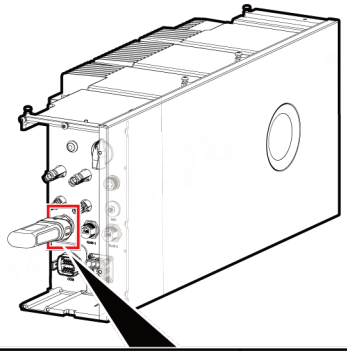

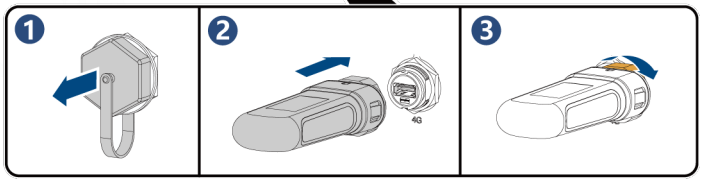

SSA1IN00028

5.7 WLAN antenna stick Installation

Tips

WLAN communication requires the installation of WLAN antenna stick.

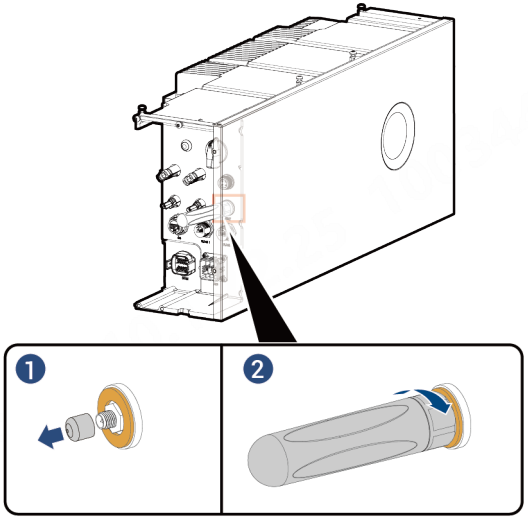

SHA1IN00009

5.8 DC input cable of Inverter

Tips

The DC cable is connected to the inverter from the PV string. Ignore this section in case of SigenStor AC inverters.

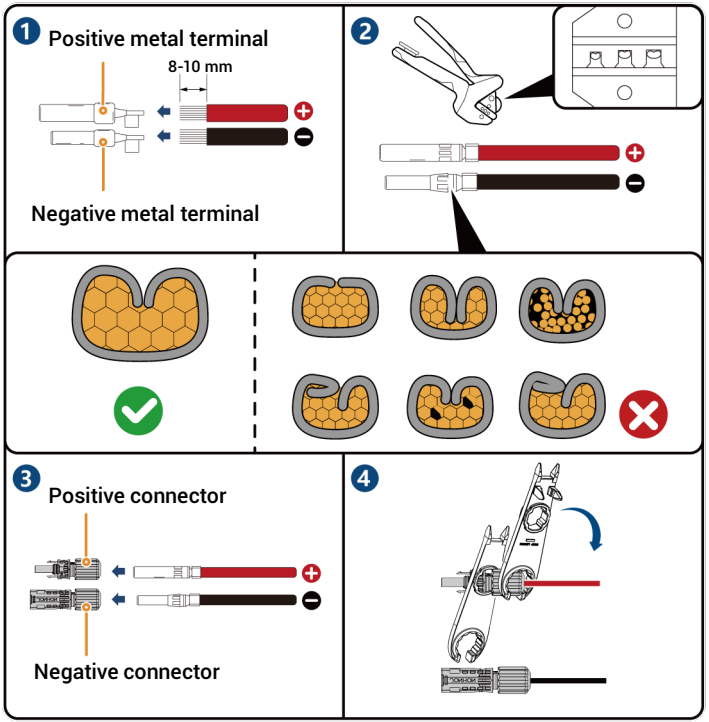

SSA1IN00024

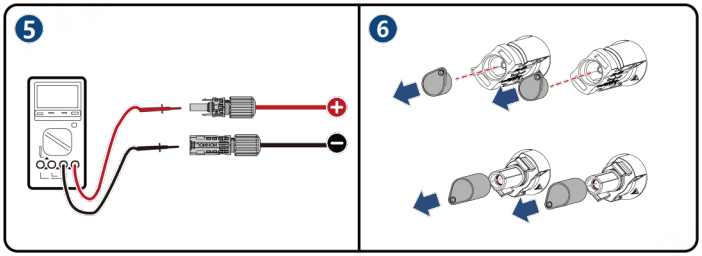

Caution

- If the voltage is negative, the polarity is incorrect. Rectify the fault in time.
- If you have only one DC input, connect it to PV1.

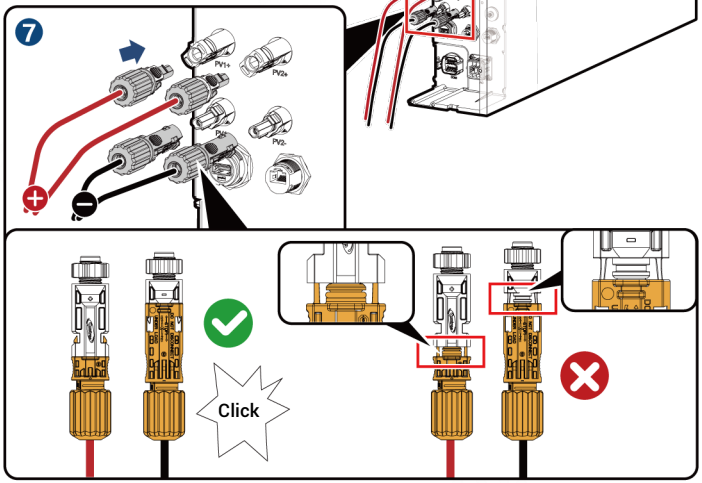

SSA1IN00038

6 Post-installation Check

S/N	Check Item
1	The equipment has been securely installed.
2	Ground cables, DC cables, signal cables, etc. are installed accurately without leftovers.
3	The cable fastening screws or terminals are properly installed.
4	There are no sharp spikes or acute angles at the cut point of the cable tie.
5	DC SWICH is in the OFF state.
6	Ports that are not in use have waterproof covers or plugs installed.
7	There is no construction left inside or outside the equipment.

After confirmation, install the SigenStor BAT and SigenStor EC/SigenStor AC/Sigen Hybrid decorative covers.

7 Installation of the Decorative Cover

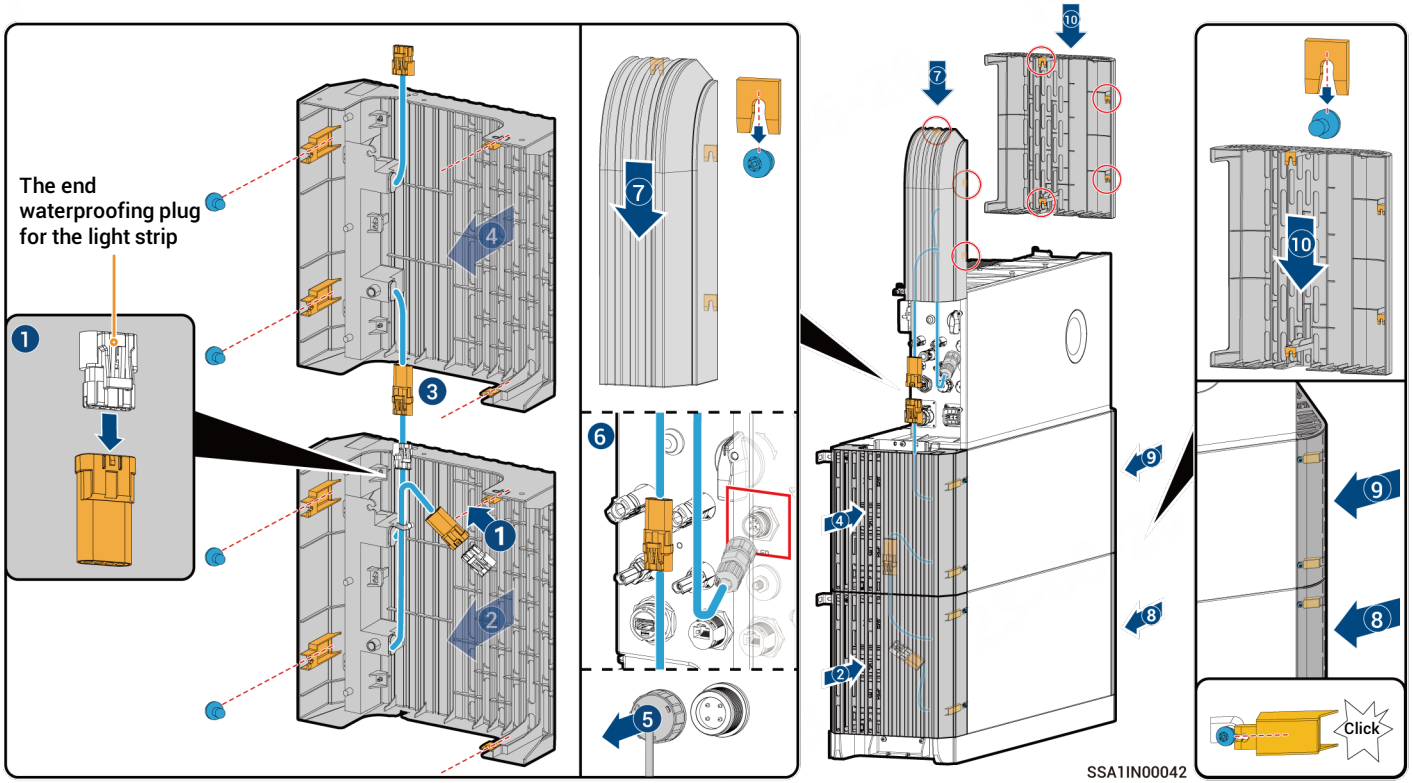

Caution

- The end waterproofing plug for the light strip in step 1 is at the lower end of the decorative cover on the left side of the inverter, please remove it for spare.
- If the equipment is not equipped with a decorative cover light strip, ignore Steps 1 3 5 6 in the figure.

8 Equipment Power-On

1. Turn on the front switch of the equipment.
2. Rotate DC SWITCH to ON. (This step is not necessary for SigenStor AC)
3. Observe the indicators on the front side of the inverter to learn about the equipment status.

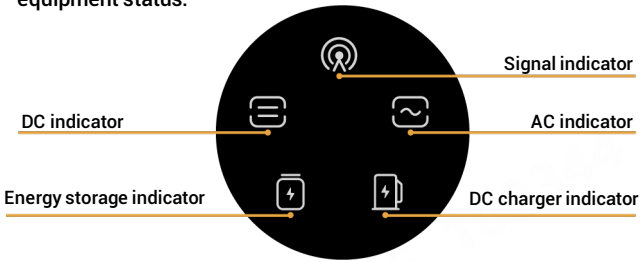

SSA1IN00027

Indicator	Color	State	Description
		Always on	The DC side is connected but not running.
		Always on	The DC side is running.
		-	The DC side is not connected.
		Flash	The DC side is faulty.
		Always on	The inverter is faulty.
		Always on	The AC side is connected but not running.
		Always on	Grid-connected operation.
		Always on	Off-grid operation.
		-	The AC side is not connected.
		Flash	Off-grid overload operation.
		Flash	The AC side is faulty.
		Always on	The inverter is faulty.

Indicator	Color	State	Description
		Always on	All SigenStor BATs are connected but not running.
		Flash	SigenStor BAT is charging.
		Flash	SigenStor BAT is discharging.
		-	All SigenStor BATs lie dormant.
		Flash	Some SigenStor BATs are faulty.
		Always on	All SigenStor BATs are faulty.
		-	The management system is not connected.
		Flash	Connected to local App.
		Always on	Connected to the management system using an FE or WLAN.
		Always on	Connected to the management system over 4G.

After powering on the equipment, install the remaining decorative covers.

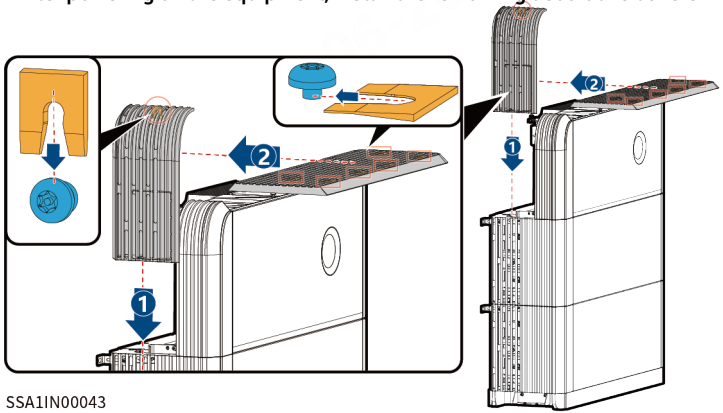

SSA1IN00043

9 Download and create new system for mySigen APP

1. Please enter the "Partner" → "Register Now" at the Company's official website (https://www.sigenergy.com), and complete the account registration based on facts.

2. Download the mySigen App and create new system for the device.

Tips

Do not use only WLAN communication for creating the new system. To use the WLAN, install Sigen CommMod or RJ45 network cables at the same time. Otherwise, it would be impossible to create the new system.

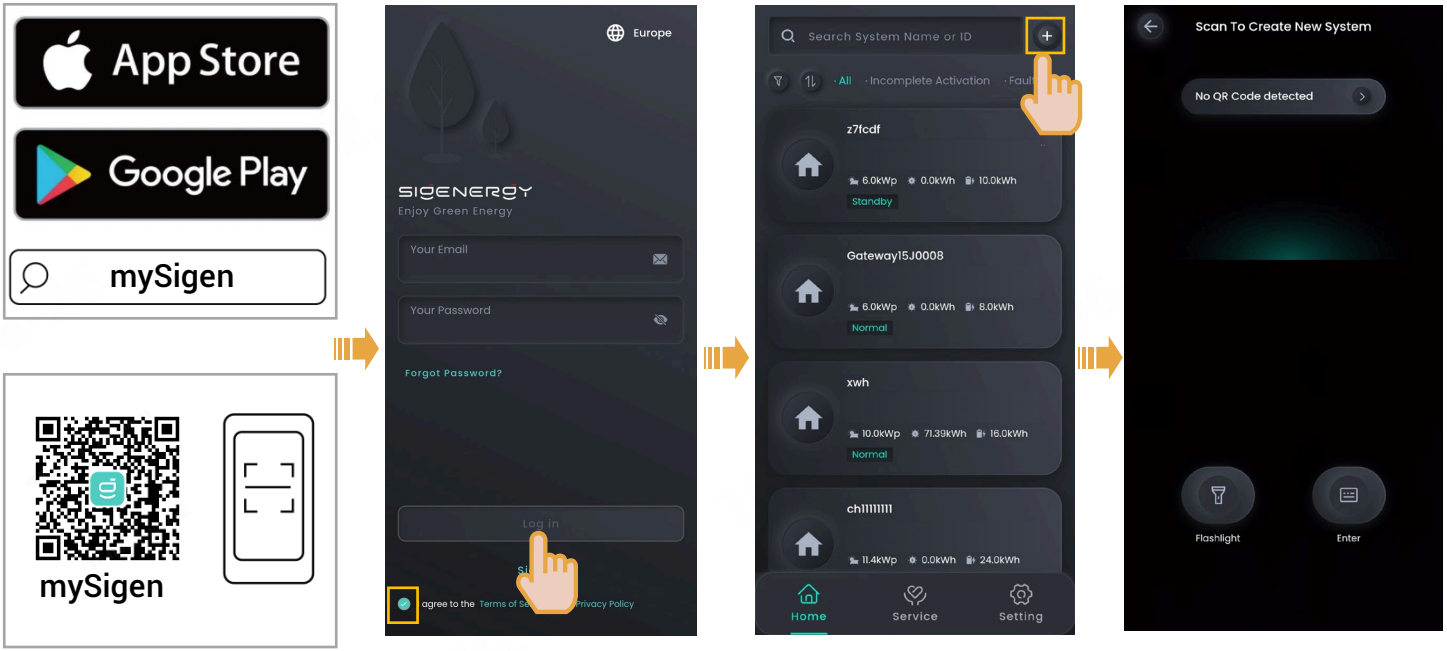

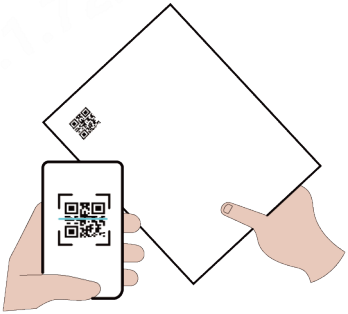

or

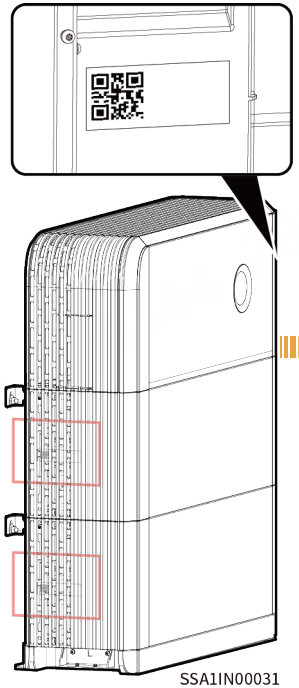

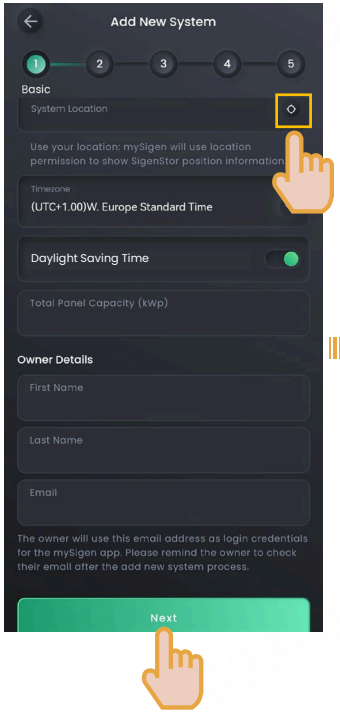

Scan the SN code label on the accompanying box material. If the SN is lost, scan the SN on the side of the inverter or SigenStor BAT.

Locate the address manually and complete the Total Panel Capacity and Owner Details

If an upgrade is required, perform the upgrade

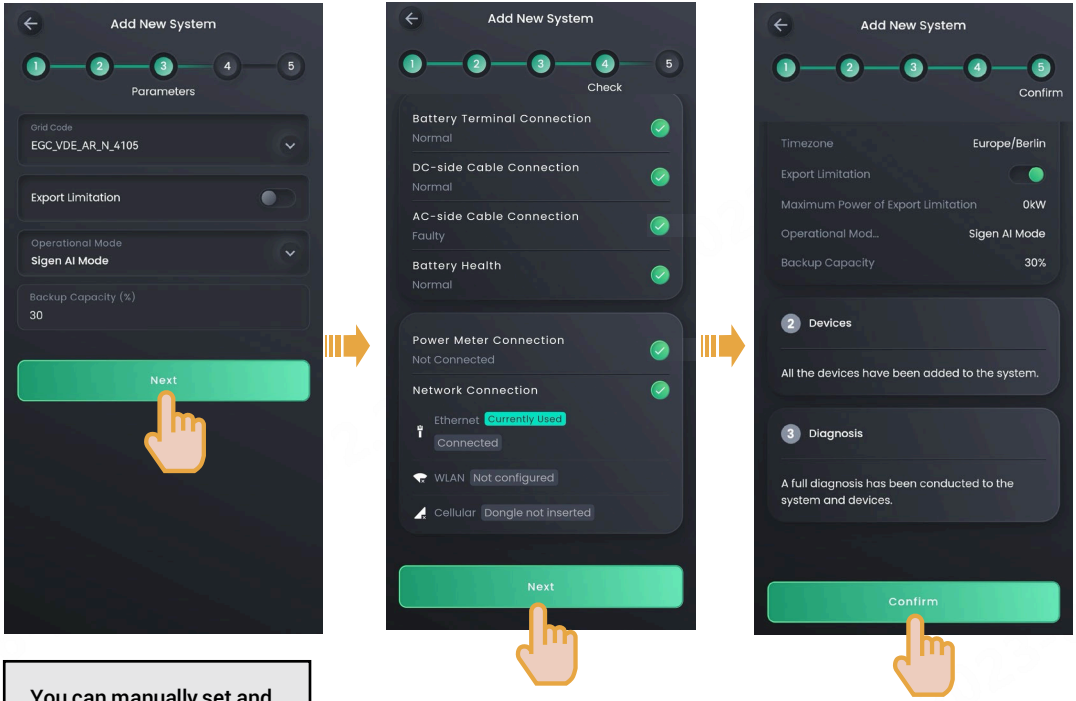

You can manually set and modify some function parameters of the power station.

3 **Upon completion of the new system creation, the installer shall inform the owner to check its "sigencloud" e-mail within 24 hours and proceed with activating its account.**

Sigenergy Technology Co., Ltd.

Website	LinkedIn	YouTube

www.sigenergy.com

Copyright © Sigenergy Technology Co., Ltd. 2023. All rights reserved.

Description in this document may contain predictive statements regarding financial and operating results, product portfolio, new technology, configurations and features of product. Several factors could cause difference between actual results and those expressed or implied in the predictive statements. Therefore, description in this document is provided for reference purpose only and constitutes neither an offer nor an acceptance. Sigenergy Technology Co., Ltd. may change the information at any time without notice.